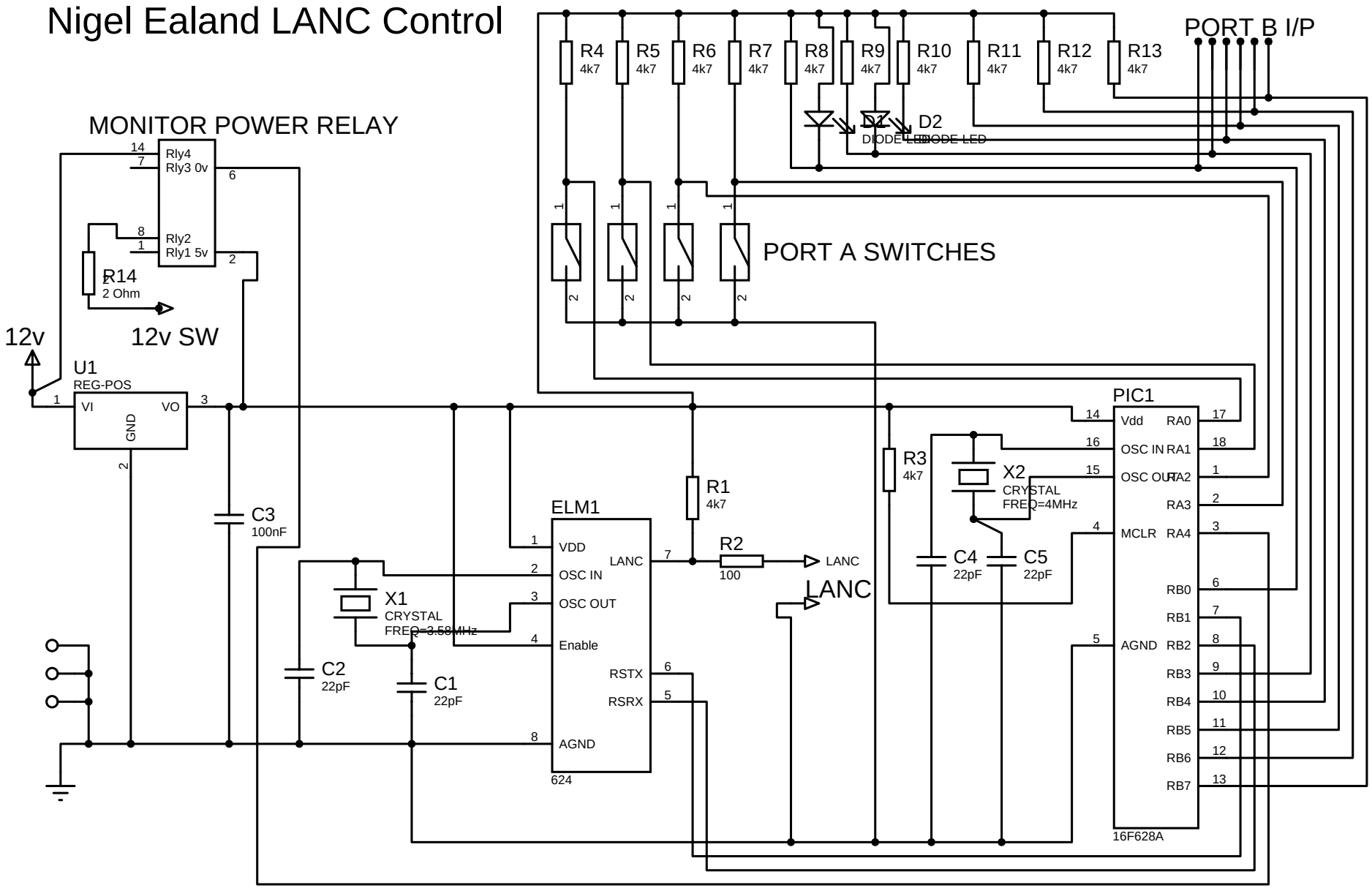Nigel Ealand LANC Control